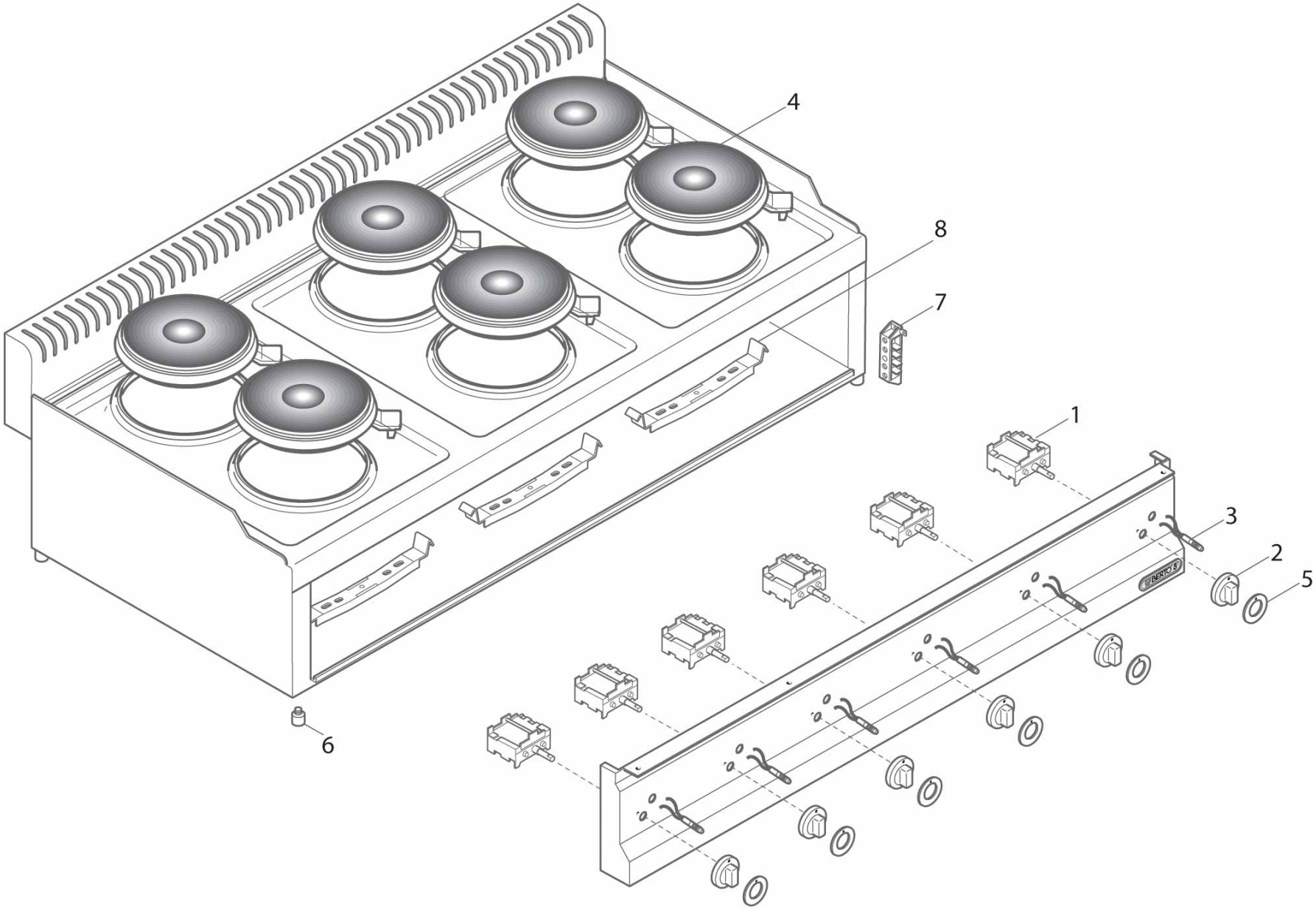
4
8
7
1
3
2
5
6

E6P4B

Pos. Item	Codice Code	Descrizione	Item Description	Designation articles	Artikelbeschreibung	Decripciòn artìculos	N° pezzi - No. pieces					
1	22049900	Commutat. x cuc.piastre el. s.	Selector	Commutateur	Umschalter	Conmutador						4
2	31876200	manopola pel rossa perno6x4,6	Electric red knob	Manette electrique rouge	Elektro-drehknopf	Mando elÉctrico rojo						4
3	30168800	Spia verde 230v d.10mmt150Ø	Green lamp 230v	Temoin lumineux vert 230v	Grune kontrollampe 230v	Piloto verde 230v						4
4	36037500	Piastra tonda d.180 2000w 230v	2000w 230v round plate	Plaque ronde 2000w 230v	Rundplatte 2000w 230v	Planche redonda 2000w 230v						4
5	31952500	Serig.rossa manop.cucina elet.	Electric knob serigraphy	Serigraphie manette electr.	Drehknopfserigraphie	Serigrafia mando electr.						4
6	30684100	Piedinoxbanc d.30xm8condado ba	Foot h.6mm	Pied h.6mm	Fuss h.6mm	Pata h.6mm						4
7	30184200	Morsettiera a 6 poli fv 122 b	Terminal board 6 poles	Bornier 6 poles	Klemmenleiste	Bornera 6 polos						1
8	36967100	Ass staffa Ø180 piastre el.	Bracket for electric plate	Etrier pour plaque	Klaue fÜr platte	Estribo para plancha						4